ITEM NUMBER
90-864852

REVISIONS				
ZONE	REV	DESCRIPTION	DWN	APP'D
	02	REVISED	DTS 01-17-07	-- --

NOTES:

1. DIMENSIONS REQUIRE A MINIMUM 13mm [1/2] CLEARANCE FOR MOTOR MOUNT DEFLECTION.
2. INNER AND OUTER SURFACES OF TRANSOM MUST BE PARALLEL WITHIN 3mm [1/8] IN AREA COVERED BY TRANSOM PLATES AND REMAIN WITHIN TRANSOM THICKNESS LIMITS.
3. REFER TO "TRANSOM CUTOUT" IN INSTALLATION MANUAL TO FIND CRANKSHAFT CENTERLINE VS. BOAT BOTTOM.
4. ENGINE POSITIONING:
   A) THE STERN DRIVE AND ENGINE CENTELINES MUST BE PARALLEL.
   B) THE ANGLE BETWEEN THE DRIVE SHAFT AND BOTH THE STERN DRIVE AND ENGINE CENTERLINES MUST BE WITHIN THE RANGE INDICATED. WHEN POSITIONED AS SUCH, THE ENGINE CENTELINE WILL BE 24mm [15/16] TO 73mm [2-7/8] ABOVE (OR BELOW) THE STERN DRIVE CENTELINE. REFER TO INSTALLATION INSTRUCTIONS.
   C) WHEN VIEWED FROM ABOVE, THE STERN DRIVE, DRIVE SHAFT, AND ENGINE CENTERLINES MUST BE IN LINE.
5. ENGINE MOUNTS ADJUST 8mm [5/16] UP OR DOWN.
6. DRIVESHAFT EXTENSION KIT SHOWN.
7. DIMENSIONS SHOWN ARE THE SAME FOR HP RATINGS 250, 270, 300, 320.
8. NUMBERS INSIDE BRACKETS ARE IN INCHES.

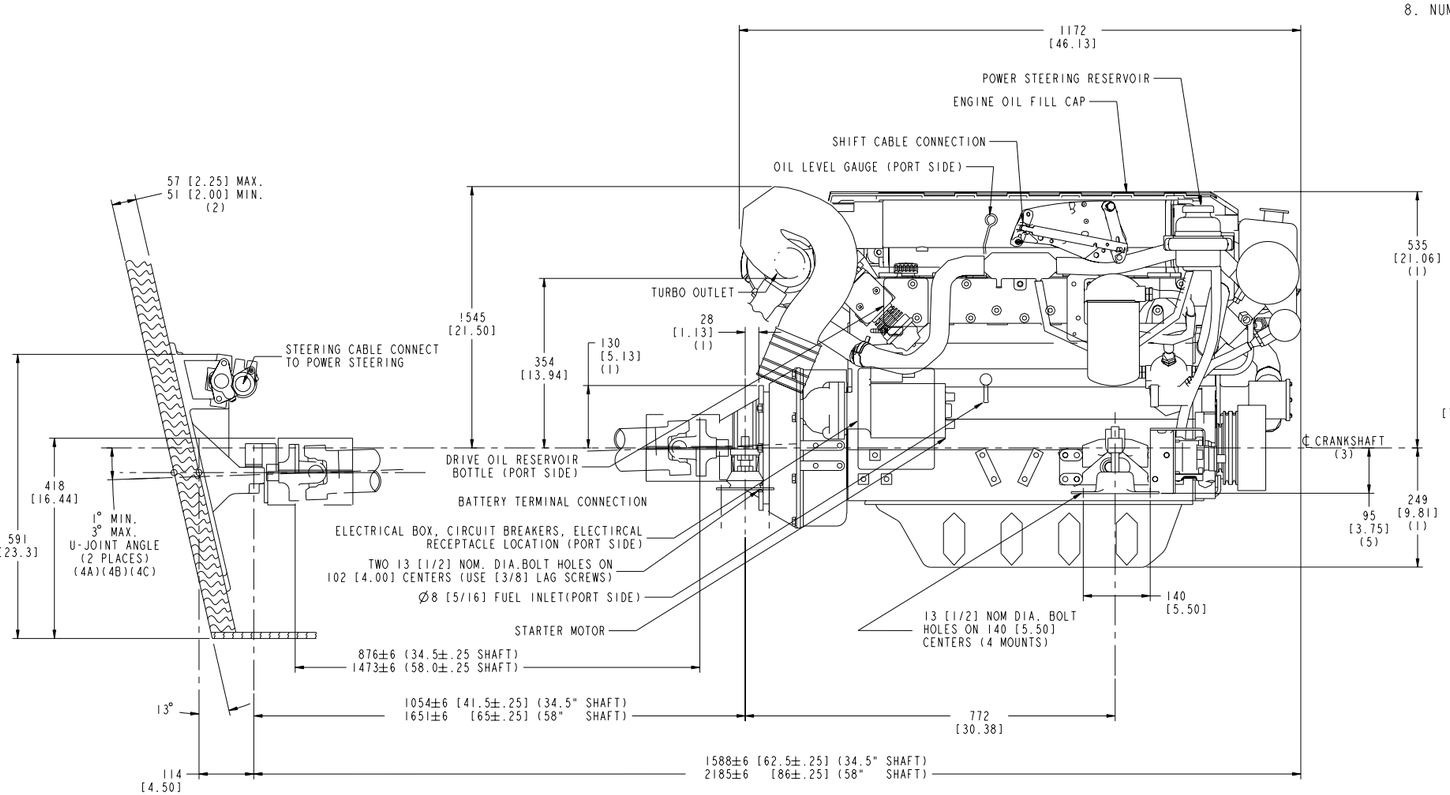

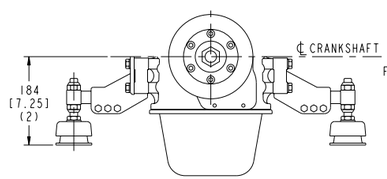

ALTERNATE FRONT MOUNT POSITION

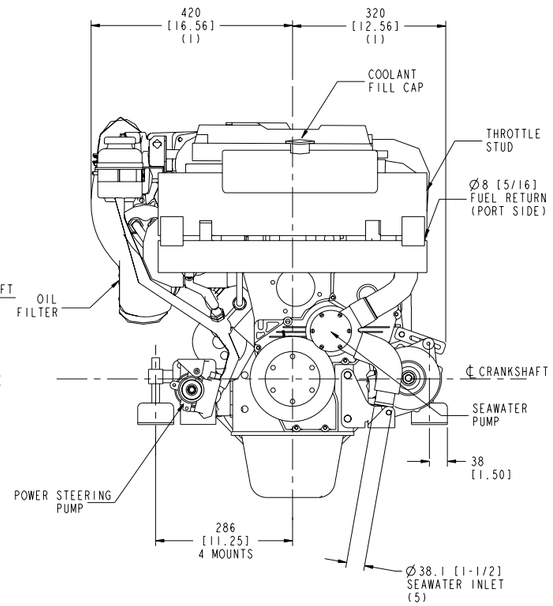

PRODUCT GRAPHICS FILE
NO ORIGINAL DRAWING EXISTS FOR THIS ITEM. THE ENGINEERING GRAPHICS DATA FOR THIS ITEM RESIDES IN THE PRODUCT GRAPHICS FILE AND IS CONTROLLED BY THE AGENCY DESIGNATED AS HAVING ITEM CONTROL.

DO NOT SCALE THIS DRAWING

THIS DRAWING/DATA FILE (AND THE INFORMATION SHOWN THEREON) IS CONFIDENTIAL AND PROPRIETARY AND SHALL NOT BE USED, DISCLOSED TO OTHERS, OR REPRODUCED BY ANY MEANS FOR ANY PURPOSE IN HARD COPY FORM OR IN MACHINE READABLE FILES, WITHOUT WRITTEN CONSENT OF CUMMINS INC., MARKETING CAD SERVICES DEPARTMENT.

LAST SECTION LETTER USED: --
REF. DRAWING STANDARDS: ANSI Y14.5M ISO R1101
UNLESS OTHERWISE SPECIFIED DIMENSIONS ARE IN: MM
TOLERANCES ARE IN: IN

CUMMINS INC.

ITEM NAME: 4.2ES (250,270,320)w/ DRIVESHAFT EXT.
IDENTIFIER: INSTALLATION DIAGRAM

DWN	D.SOMIN	09-22-06	SIZE J	CODE IDENT. NO. / ITEM NUMBER 90-864852
CHD	UNCHECKED	--		
APPD	--	--		
APPD			SCALE: N/A	ITEM CONTROL: MCS / SHEET 1 OF 1

THIRD ANGLE PROJECTION
INCHES / MILLIMETERS