ITEM NUMBER
90-862722

| REVISIONS | | | | |
|---|---|---|---|---|
| ZONE | REV | DESCRIPTION | DWN | APP'D |
| | 00 | -- | DJS 09-18-03 | -- -- |

NOTES:

1. DIMENSIONS REQUIRE A MINIMUM 13mm [1/2] CLEARANCE FOR MOTOR MOUNT DEFLECTION.
2. FRONT MOUNTS ADJUST 8mm [5/16] UP OR DOWN.
3. REAR MOUNTS ADJUST 10mm [3/8] UP OR DOWN.
4. DIMENSIONS APPLY TO POINT OF INTERSECTION OF OUTPUT SHAFT CENTERLINE AND OUTPUT FLANGE FACE.
5. SECURE SEAWATER HOSE INLET AWAY FROM ALTERNATOR BELT.
6. BASE OF MOUNT TO BE PARALLEL TO STRINGER. MOUNTS SHOWN AT CENTER OF ADJUSTMENT.
7. 12° OPTIMUM INCLINED OUTPUT SHAFT ANGLE.
8. SHOWN WITH ZF63A TRANSMISSION.
9. NUMBERS INSIDE BRACKETS ARE IN INCHES.

| DIMENSION (MM) | OUTPUT SHAFT ANGLE | | |
|---|---|---|---|
| | 10~ | 12~ | 15~ |
| A | 147 | 140 | 130 |
| B | 832 | 834 | 836 |
| C | 378 | 366 | 347 |
| D | 110 | 80 | 37 |
| E | 190 | 183 | 185 |
| F | 604 | 636 | 684 |
| G | 1157 | 1162 | 1166 |
| H(33° ELBOW) | 1202 | 1201 | 1196 |
| H(65° ELBOW) | 1134 | 1131 | 1125 |
| J | 1457 | 1448 | 1431 |
| K(33° ELBOW) | 63 | 68 | 74 |
| K(65° ELBOW) | 118 | 120 | 123 |
| L(33° ELBOW) | 338 | 338 | 338 |
| L(65° ELBOW) | 283 | 285 | 289 |
| M | 106 | 111 | 117 |

| DIMENSION (IN) | OUTPUT SHAFT ANGLE | | |
|---|---|---|---|
| | 10~ | 12~ | 15~ |
| A | 5-3/4 | 5-1/2 | 5-1/8 |
| B | 32-3/4 | 32-7/8 | 32-15/16 |
| C | 14-7/8 | 14-3/8 | 13-5/8 |
| D | 4-5/16 | 3-3/16 | 1-7/16 |
| E | 7-1/2 | 7-3/16 | 7-5/16 |
| F | 23-13/16 | 25 | 7-5/16 |
| G | 45-9/16 | 45-3/4 | 45-15/16 |
| H(33° ELBOW) | 47-1/2 | 47-3/16 | 47 |
| H(65° ELBOW) | 44-9/16 | 44-7/16 | 44-1/4 |
| J | 57-3/8 | 57 | 56-5/16 |
| K(33° ELBOW) | 2-1/2 | 2-11/16 | 2-15/16 |
| K(65° ELBOW) | 4-5/8 | 4-3/4 | 4-13/16 |
| L(33° ELBOW) | 13-5/16 | 13-5/16 | 13-5/16 |
| L(65° ELBOW) | 11-1/8 | 11-3/16 | 11-3/8 |
| M | 4-3/16 | 4-3/8 | 4-5/8 |

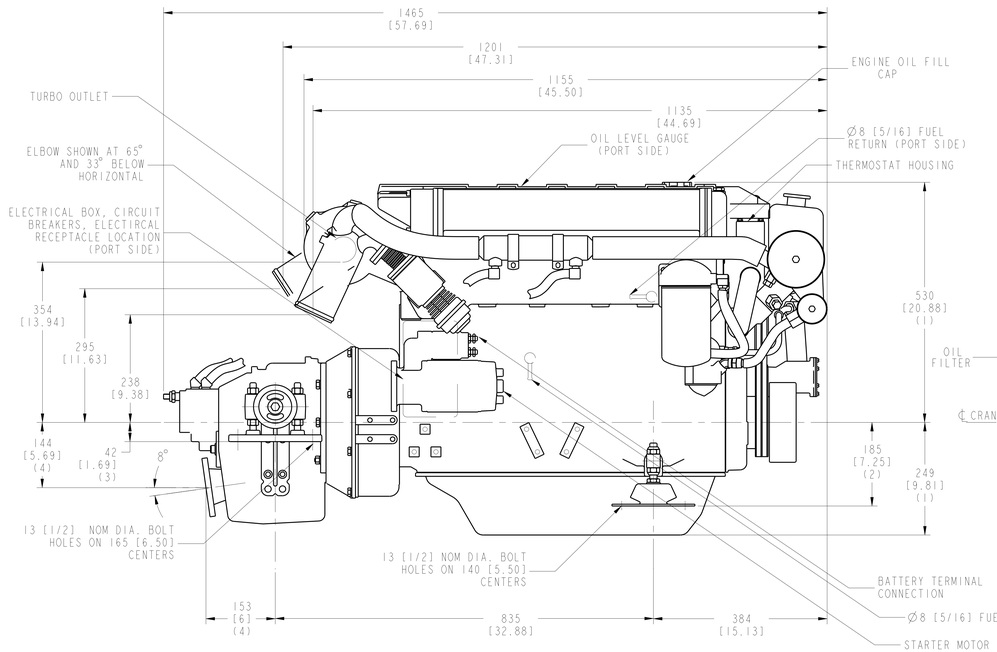


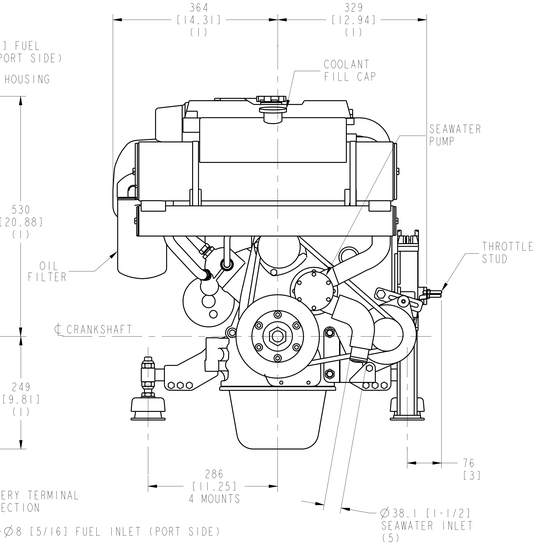


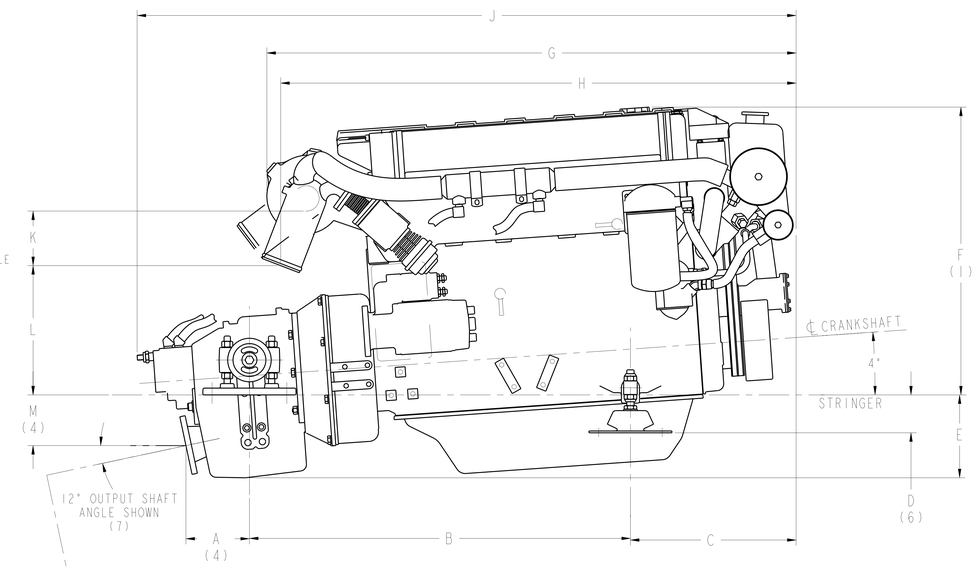


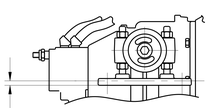


ALTERNATE TRANSMISSION MOUNT POSITION

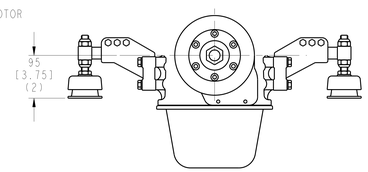


ALTERNATE FRONT MOUNT POSITION

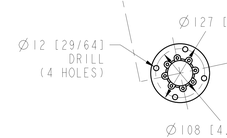


OUTPUT FLANGE (SAE NO. 510)

PRODUCT GRAPHICS FILE
NO ORIGINAL DRAWING EXISTS FOR THIS ITEM. THE ENGINEERING GRAPHICS DATA FOR THIS ITEM RESIDES IN THE PRODUCT GRAPHICS FILE AND IS CONTROLLED BY THE AGENCY DESIGNATED AS HAVING ITEM CONTROL.

DO NOT SCALE THIS DRAWING

THIS DRAWING/DATA FILE (AND THE INFORMATION SHOWN THEREON) IS CONFIDENTIAL AND PROPRIETARY AND SHALL NOT BE USED, DISCLOSED TO OTHERS, OR REPRODUCED BY ANY MEANS FOR ANY PURPOSE IN HARD COPY FORM OR IN MACHINE READABLE FILES, WITHOUT WRITTEN CONSENT OF CUMMINS INC., MARKETING CAD SERVICES DEPARTMENT.

LAST SECTION LETTER USED: --
REF. DRAWING STANDARDS: ANSI Y14.5M ISO R1101
UNLESS OTHERWISE SPECIFIED DIMENSIONS ARE IN: MM
[ ] ARE IN: IN

| | | | |
|---|---|---|---|
| DWN | D.SOMIN | 09-18-03 | |
| CHD | UNCHECKED | | |
| APPD | -- | -- | |
| APPD | | | |

CUMMINS INC.
ITEM NAME: MerCruiser 4.2 EI250
IDENTIFIER: INSTALLATION DIAGRAM
SIZE: J
CODE IDENT. NO.:
ITEM NUMBER: 90-862722
SCALE: N/A
ITEM CONTROL: MCS
SHEET 1 OF 1

THIRD ANGLE PROJECTION

INCHES / MILLIMETERS