ITEM NUMBER
4953731

REVISIONS				
ZONE	REV	DESCRIPTION	DWN	APP'D
	01	PRELIMINARY	D.SOMIN 06-14-06	..

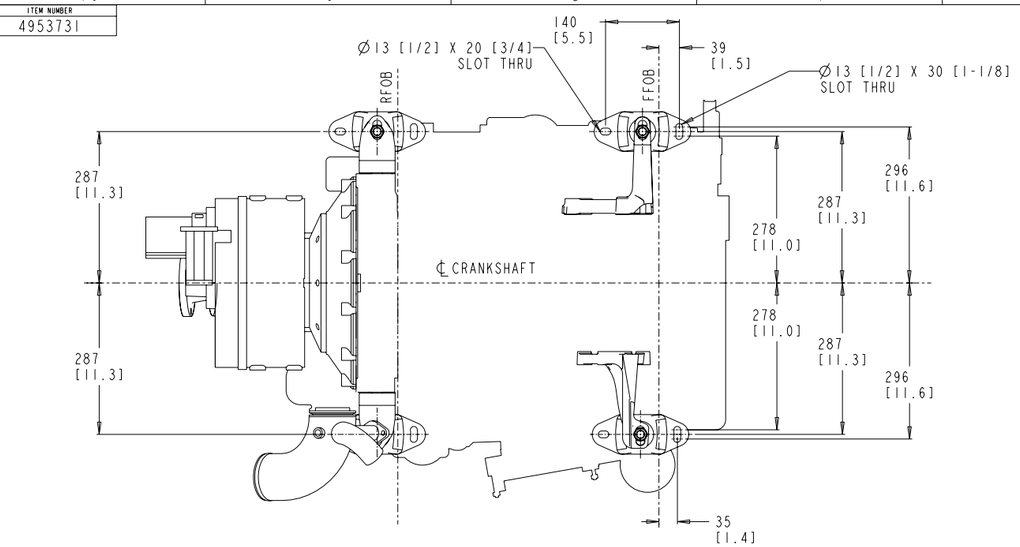

TOP VIEW

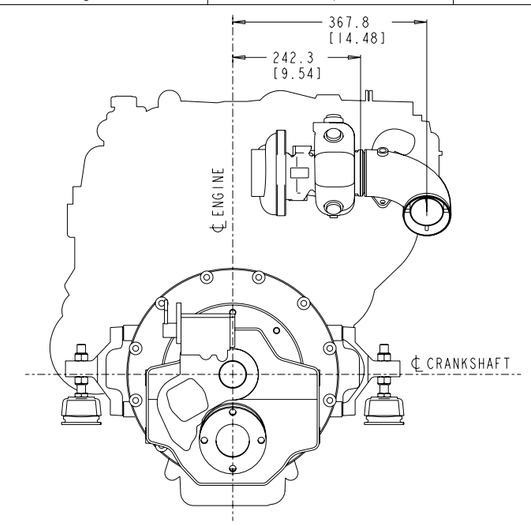

REAR VIEW

NOTES:

1. DIMENSIONS REQUIRE A MINIMUM 13mm [1/2] CLEARANCE FOR MOTOR MOUNT DEFLECTION.
2. FRONT AND REAR ENGINE MOUNTS ADJUST 8mm [5/16] UP OR DOWN.
3. DIMENSIONS APPLY TO POINT OF INTERSECTION OF OUTPUT SHAFT CENTERLINE AND OUTPUT FLANGE FACE.
4. SECURE SEAWATER HOSE INLET AWAY FROM ALTERNATOR BELT.
5. SHOWN WITH TECHNODRIVE TM485A TRANSMISSION.
6. FOR CORRECT CABIN/WATER HEATER CONNECTION, REFER TO INSTALLATION MANUAL.
7. NUMBERS INSIDE BRACKETS ARE IN INCHES.

PRELIMINARY PRINT
PRINT MADE ON 06/14/06

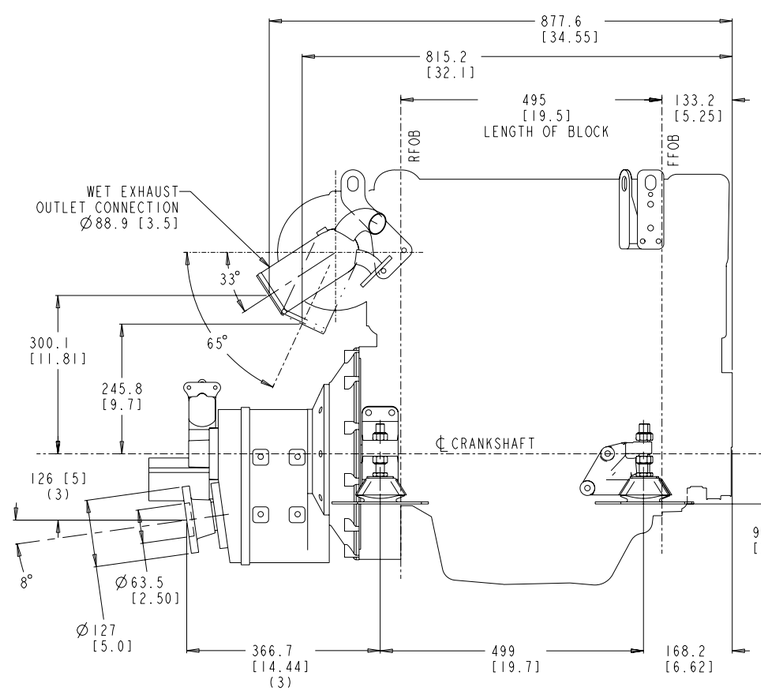

STARBOARD VIEW

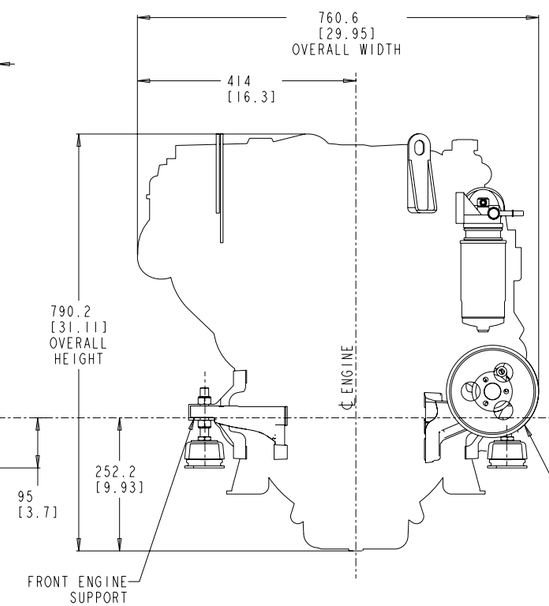

FRONT VIEW

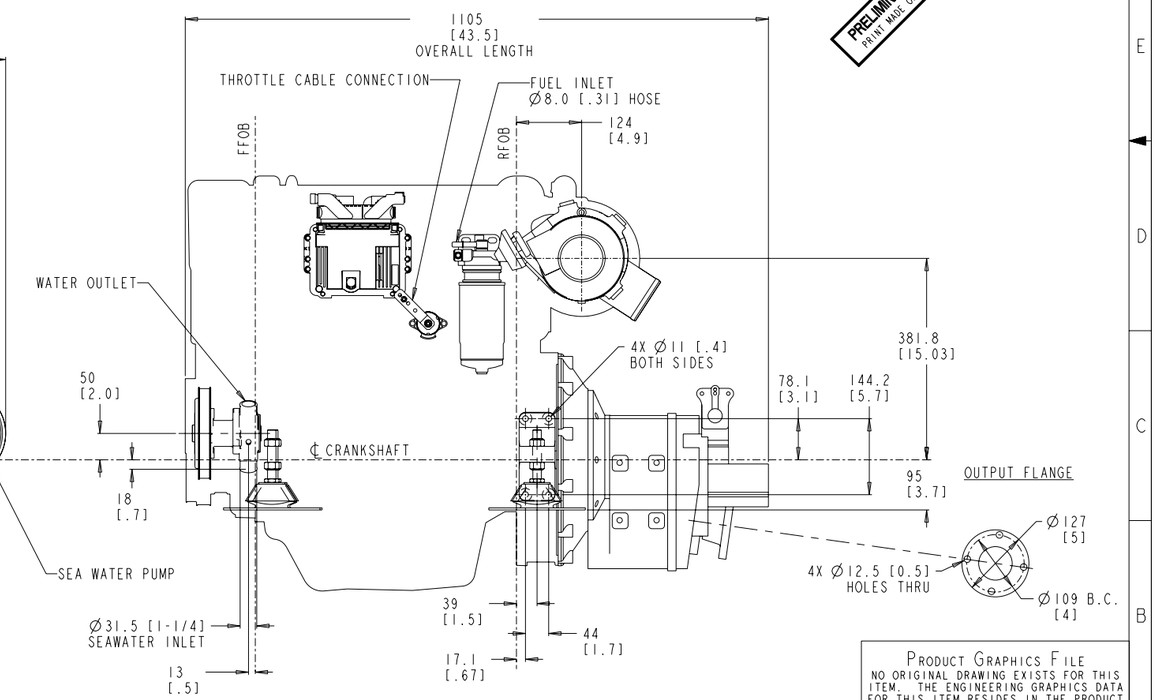

PORT VIEW

PRODUCT GRAPHICS FILE
NO ORIGINAL DRAWING EXISTS FOR THIS ITEM. THE ENGINEERING GRAPHICS DATA FOR THIS ITEM RESIDES IN THE PRODUCT GRAPHICS FILE AND IS CONTROLLED BY THE AGENCY DESIGNATED AS HAVING ITEM CONTROL.

DO NOT SCALE THIS DRAWING

THIS DRAWING/DATA FILE (AND THE INFORMATION SHOWN THEREON) IS CONFIDENTIAL AND PROPRIETARY AND SHALL NOT BE USED, DISCLOSED TO OTHERS, OR REPRODUCED BY ANY MEANS FOR ANY PURPOSE IN HARD COPY FORM OR IN MACHINE READABLE FILES, WITHOUT WRITTEN CONSENT OF CUMMINS INC., MARKETING CAD SERVICES DEPARTMENT.

THIS DRAWING IS BASED ON CONFIG. NO. D933002MX03

LAST SECTION LETTER USED: NA	REF. DRAWING STANDARDS: ANSI Y14.5M ISO R1101	CUMMINS INC.	
UNLESS OTHERWISE SPECIFIED DIMENSIONS ARE IN: MM ( ) ARE IN: IN		ITEM NAME: 2.8 L TIER 2 W/ TM485A	
		IDENTIFIER: INSTALLATION DIAGRAM	
DWN: D.SOMIN	M-02-M	SIZE: J	CODE IDENT. NO. / ITEM NUMBER: 4953731
CHD: UNCHECKED	..		
APPD: ..	..	SCALE: .25	ITEM CONTROL: MCS / SHEET 1 OF 1
APPD:			

THIRD ANGLE PROJECTION

MILLIMETERS / INCHES